UMA – Universal Machine Automata
Model 2

An adaptable robotic platform for maintenance operations in harsh environments

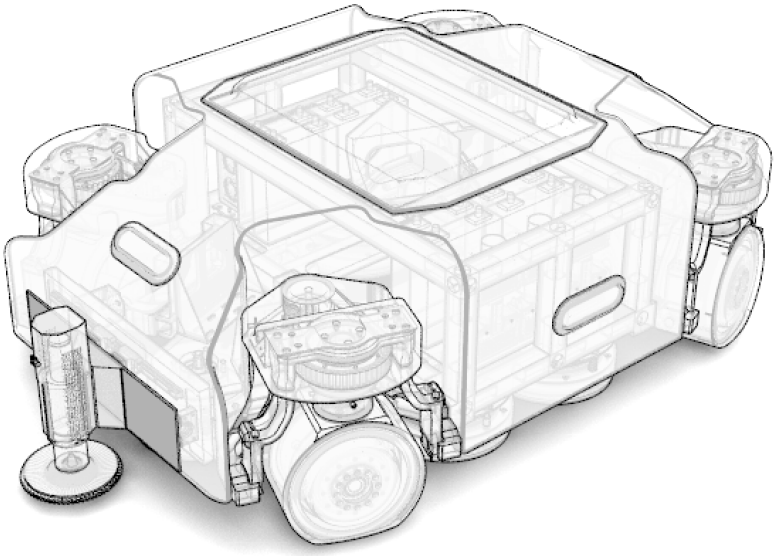

University of applied Sciences and Arts of Southern Switzerland (SUPSI)
Departement of Technology and Innovation, ISTePS Research Institute
Automation, Robotics and Machines Laboratory (ARM-Lab)
SUPSI DTI - ISTePS
Polo Universitario Lugano - Campus Est
Via la Santa 1
CH-6962 Viganello (TI)

In Europe, the Maintenance, Repair, and Overhaul (MRO) sector will be worth 220 Billion USD by 2025 with a constant growth of 17%. Inspection and repair – especially off-shore – are still entirely human-based relying on an extremely skilled workforce with deep knowledge in manufacturing tasks but also effectively taking complex decisions in very critical operating scenarios."

Men and women challenge physical and cognitive boundaries while executing tasks in critical setups, frequently in harsh condition and with limited possibilities to be dexterous. Such extremely stressful working configuration triggers profound human instincts that enable enhanced context awareness and strong self-cognitive and physiological control.

THIS IS NOT ENOUGH.

"The world of MRO reports yearly the death of 3'500 expert human operators as a result of accidents and 3.3 million non-fatal injuries of various nature [2017]"

This is related to neither too poor safety measures nor too shallow human behavior. The harsh environment and unforeseen events, including unpredictable faults and misfunctioning, can significantly raise the level of danger. This does not just refer to maintaining old structures; the higher the number of new big plants, the bigger the risks for humans.

AND YET

MRO still primarily relies upon the human workforce; the motivation is simple: no other solution has proved to embrace the same advanced ability to strategically infer and cognitively adapt to this complex ecosystem; also, so far nothing is fast like humans.

MRO applications demanding cognitive and physical load for human operators

Introducing UMA-2

The MRO industry is expected to adopt robotic systems in harsh environments to speedup the maintenance operations while reducing the workplace injuries for human operators.
UMA-2 introduces an advanced mobile robotic platform able to adapt to a variety of operating conditions by climbing vertical surfaces. Its tasks include inspection, measure, and maintenance works.
This major breakthrough sets it apart from the current state of the art of commercial platforms, which are limited to inspection only.

UMA-2 tasks
- Inspection: Vision, 3D scanning, Ultrasound
- Maintenance: Rust removal via water jetting, Sandblasting and Brushing, Spraying of protective coatings, Painting.

Capabilities
- Operating on flat and vertical surfaces
- Dry, wet and corroded surfaces with max step of up to 20mm.
- IP 65

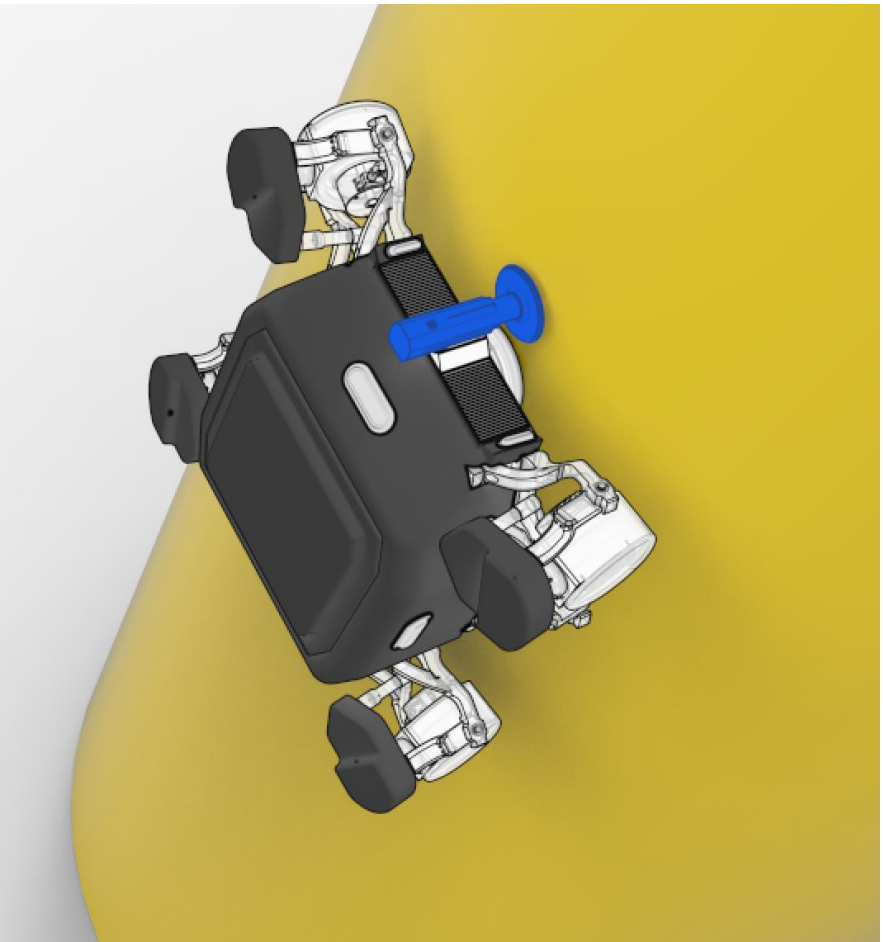

UMA-2's mission is to drastically reduce the risks for human operators in the MRO value chain by placing mobile robots into the equation. The UMA robot will achieve a performance comparable to humans while guaranteeing people' safety, health and comfort. Switzerland must set a disruptive example for the world by embracing unprecedented working practices and exploiting technology to ensure public health. UMA sets a clear response to the major issues that can jeopardize the existence of reliable MRO assets in the long-term.

Inside UMA-2

The UMA mobile platform is built around a lightweight carbon fiber and aluminum frame.
It features a highly accurate 4-wheeled drive system, each of them with steering ability allowing full freedom of movement both back and forth as well as sideways.
The driving systems features three DoF wheels adapting to non-flat terrain and allowing to wrap around circular surfaces like wide pillars, conduits, oil tanks.
An active and powerful suction system located at the bottom of the vehicle provides continuous adhesion to the surface allowing it to climb vertical surfaces.
The vehicle is equipped with a general-purpose front linear tool axis designed to host tools enabling a wide range of activities from inspection, measurement, maintenance, and repair works.

The vehicle is battery operated avoiding the need for inconvenient tethered operations.
Internally it is equipped with an active 3D scanning system that allows performing surface 3D scans to support inspection activities.
Motion control, metrology, and vision processing are performed onboard thanks to the high computational power offered by the embedded i7 industrial PC solution.

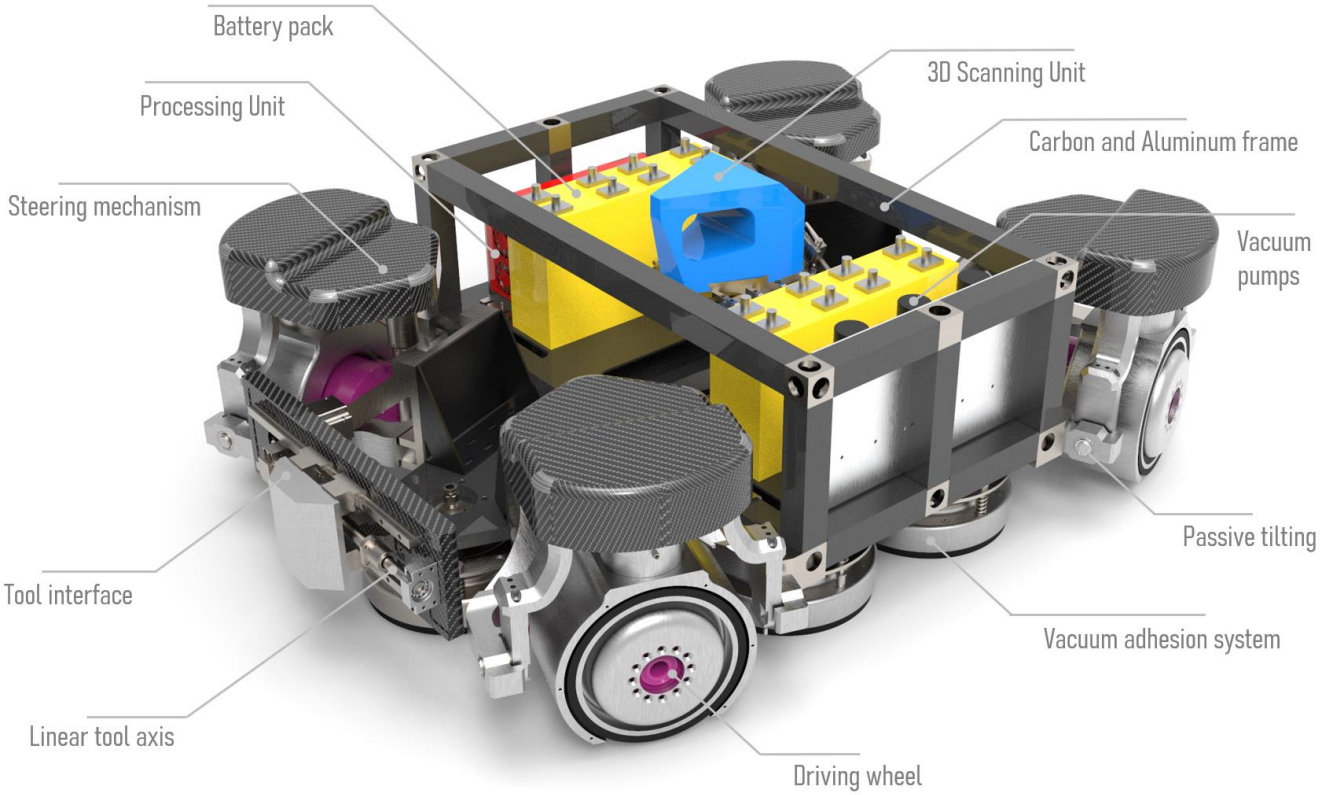

The driving system

UMA-2 is equipped with a high accuracy positioning system. Based on a 4-wheel damped drive system, each wheel is independent and has three degrees of freedom, allowing great adaptability to the terrain's surface. The high torque required to climb vertical surfaces is achieved thanks to high performance harmonic drive gear box.

Each wheel is conceived as two actuated Degree of Freedoms (DoFs): the first axis consists of a servomotor with harmonic drive gearbox directly connected to a vulcanized rubber wheel which generates the axial rotation. The second axis drives the orientation of the wheel thanks to a zero backlash transmission and it is controlled by a motor integrated into the module itself. A passive tilting joint manages the adaptation to uneven or curved surfaces. An independent damping system is integrated in each wheel to adapt to the terrain and enable the vehicle to overcome steps of up to 20 mm.

The wheel

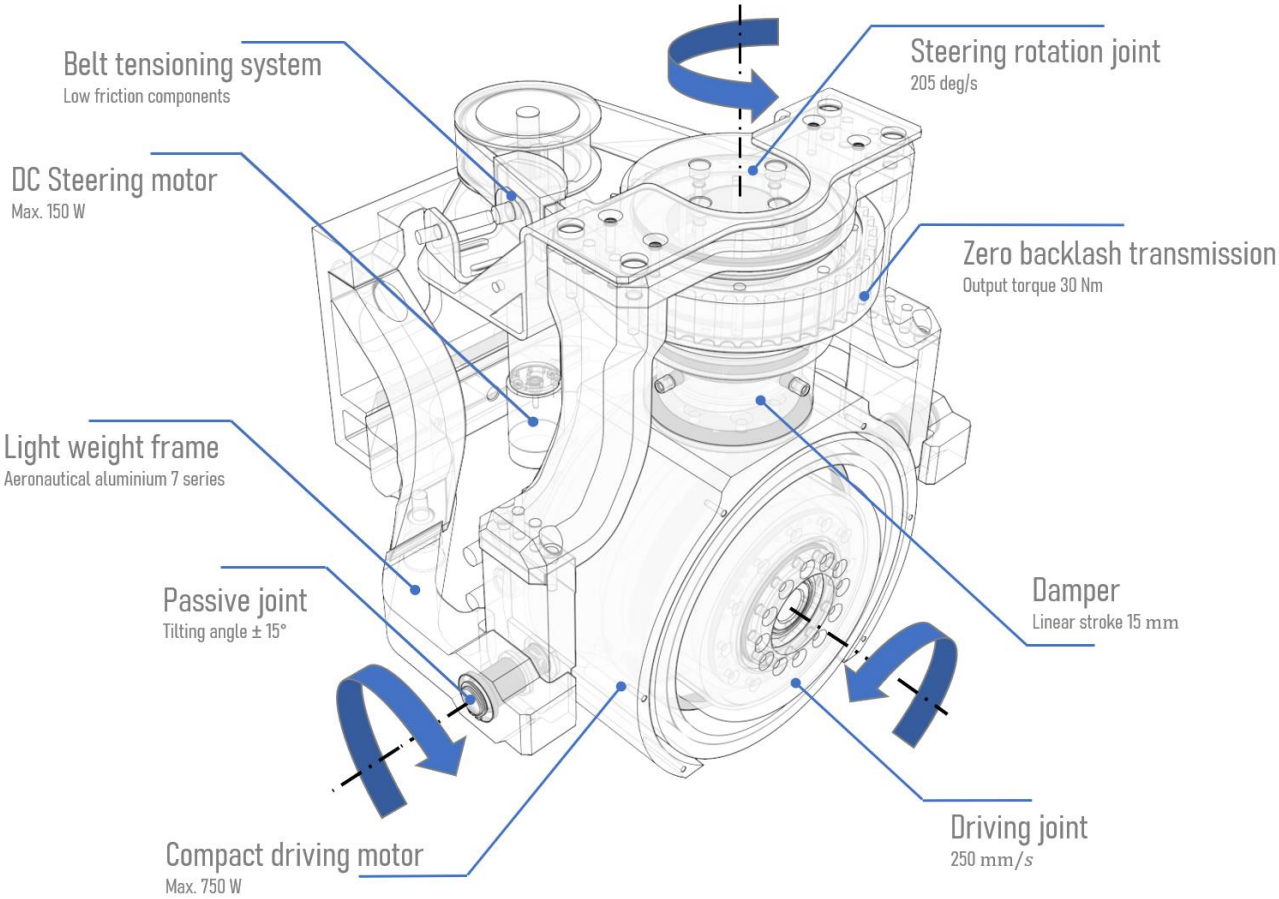

The adhesion system

The UMA-2 adhesion system is located at the bottom of the vehicle and it is composed by a set of six independent suction cups. The purpose of this system is to generate the needed adhesion strength able to hold the mobile platform attached to different working surfaces in terms of material, surface temperature (i.e. frozen, cold or hot), surface conditions (e.g. dry or wet) and surface roughness.

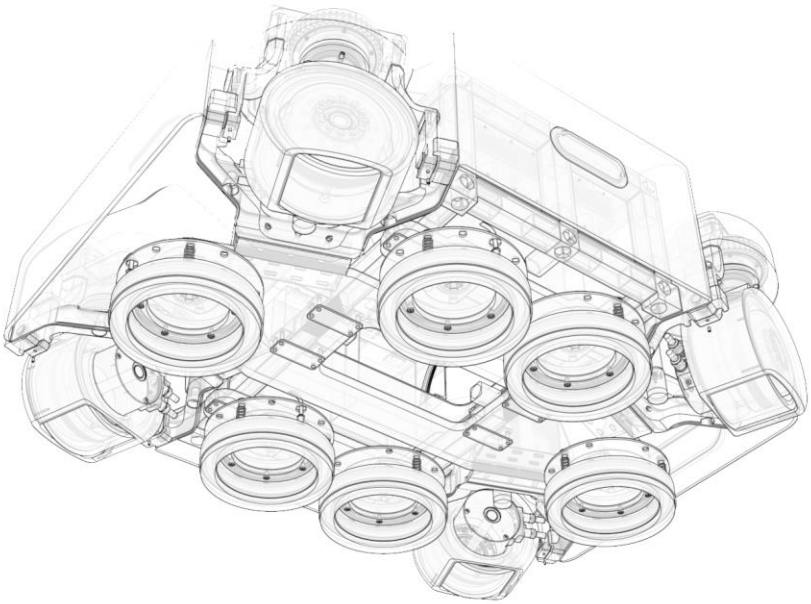

The vacuum cup design

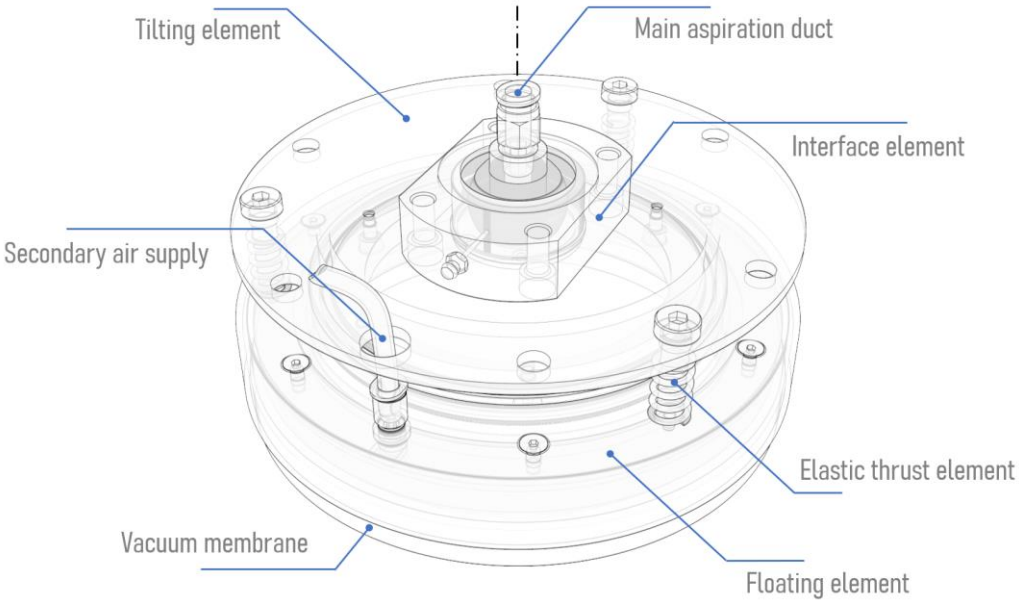

The system relies upon a set of continuous vacuum pumps to generate a low-pressure atmosphere inside the chambers.

The cups feature adaptable vacuum chambers whose size, material and vacuum level are driven by the context requirements.

A request for grant of an European patent has been submitted under application number EP21174904.9 for the above described vacuum cup, main component of the multi-adhesion system and it is currently patent pending.

3D scanning capabilities

The center body of UMA-2 hosts a motorized 3D scanning solution allowing the robot to perform scans of the surface in order to detect and identify the surface areas to be processed.

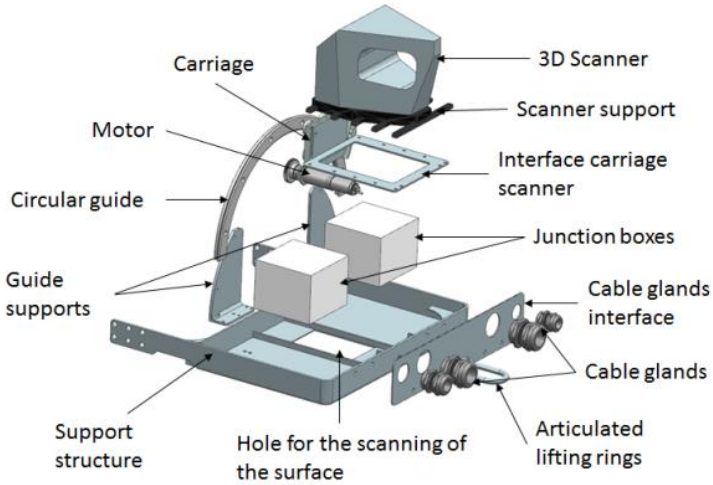

An Artec Space Spider 3D scanner is mounted on a motorized circular guide enabling the scanner to perform an arc movement around the area to be scanned. This enables the capture and regeneration in high detail of the terrain's surface in 3D.

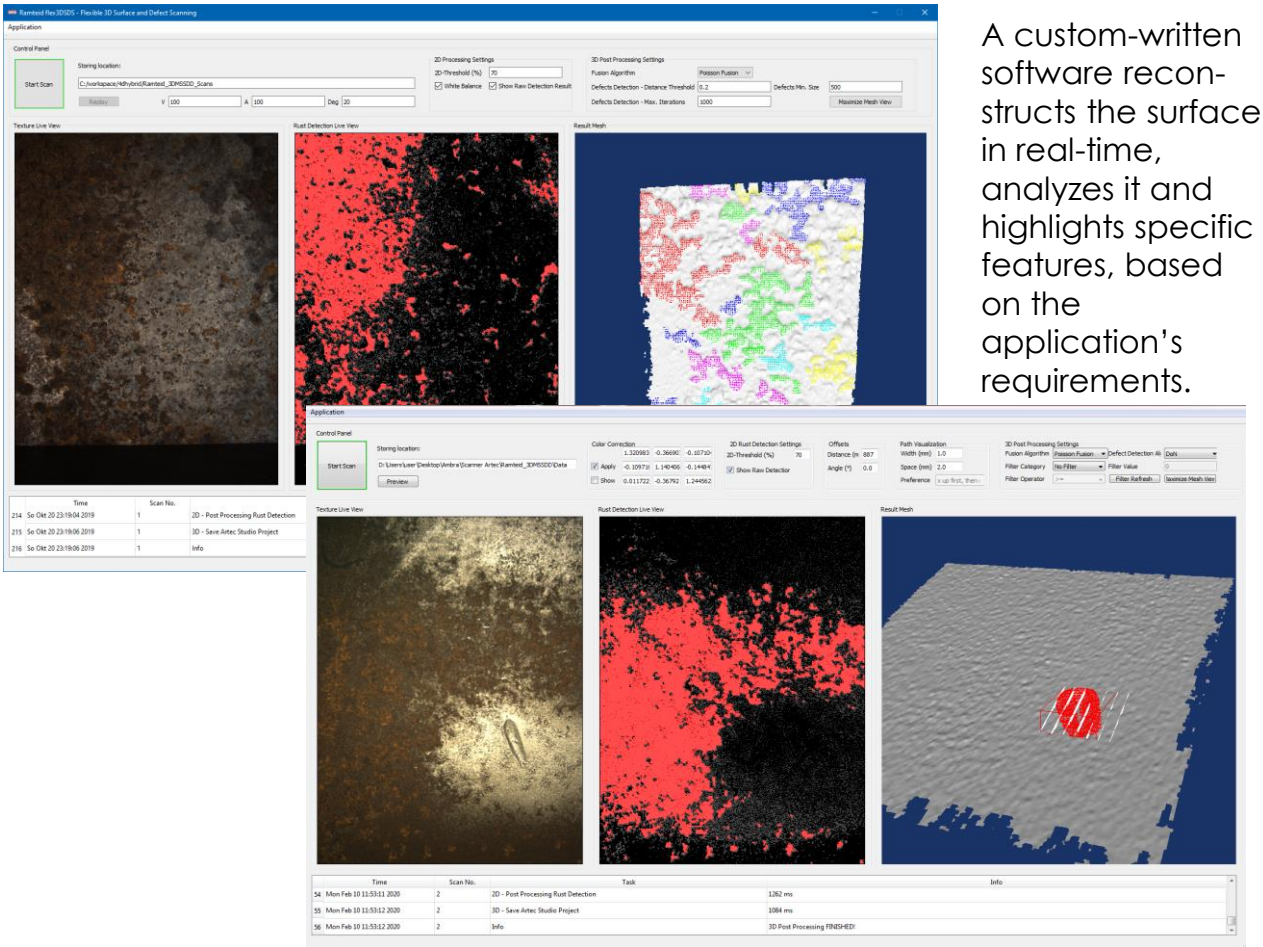

A custom-written software recon-structs the surface in real-time, analyzes it and highlights specific features, based on the application's requirements.

The motion control

The system is equipped with eight high power compact motion controllers, connected by industrial bus EtherCAT providing each wheel with full motion freedom and great positioning accuracy.
This highly flexible solution allows the vehicle to move in any direction and perform coarse movements to achieve the intervention area as well as the very fine movements required during the inspection/repair operations.

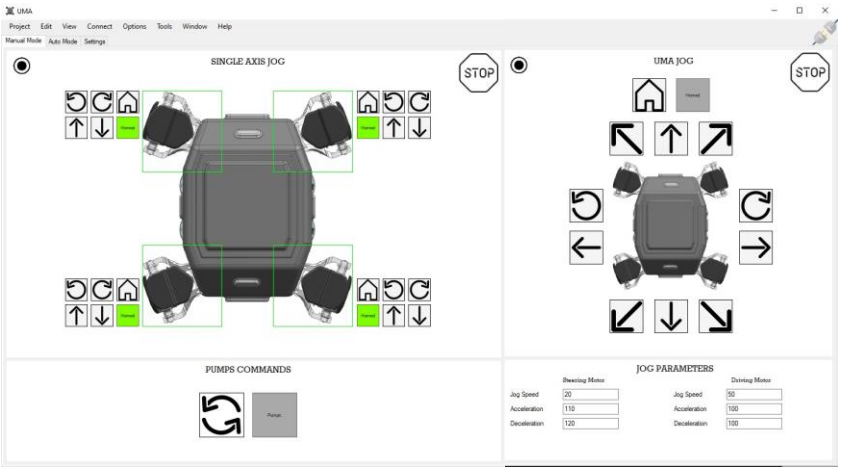

A dedicated software provides great control over the vehicle both at high as well as at low level.
Predefined wheels configurations enables the vehicle to perform several types of movement like back and forth, sideways and center spin.

The tools

UMA-2 can be equipped with a wide range of tools thanks to the general purpose linear axis mount available on the front of the robot.
From rust removal via water jetting, to sandblasting and brushing, from spraying of protective coatings to painting. This combined with the metrology capabilities: vision, 3D scanning, and ultrasonic thickness inspection means limitless potential applications.

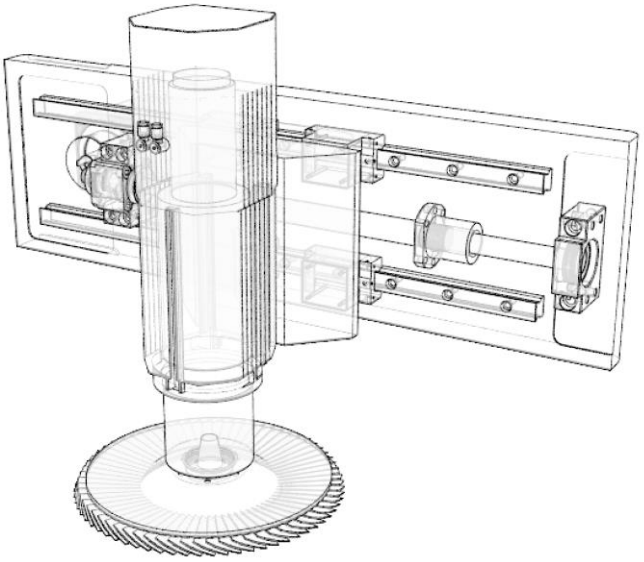

Technical Specifications

Physical specs	
Outer dimensions (LxWxH) [mm]	1000 x 740 x 365
Overall Weight [Kg]	60
Payload [Kg]	100
Performance specs	
Max. climbing velocity [m/s]	0.75
Max. acceleration [m/s2]	0.5
Steering velocity [deg/s]	205
Min. surface radius curvature [m]	2
Surface conditions	Dry, wet, corroded
Surface material	Ferrous, no-ferrous, composite
Max. obstacle height [mm]	20
Electrical specs	
Battery type	LiFePO4 24V, 100Ah
Battery autonomy [h]	2.5 while climbing
Charging time [h]	1
Available power source	24V, 10A
Vision cameras and sensors	Stereo depth camera and proximity sensors
Tool specs	
Linear tool stroke[mm]	300
Max. Tool Linear speed [m/s]	1
Tool press force [Kg]	5
Internal Protection (IP)	IP65

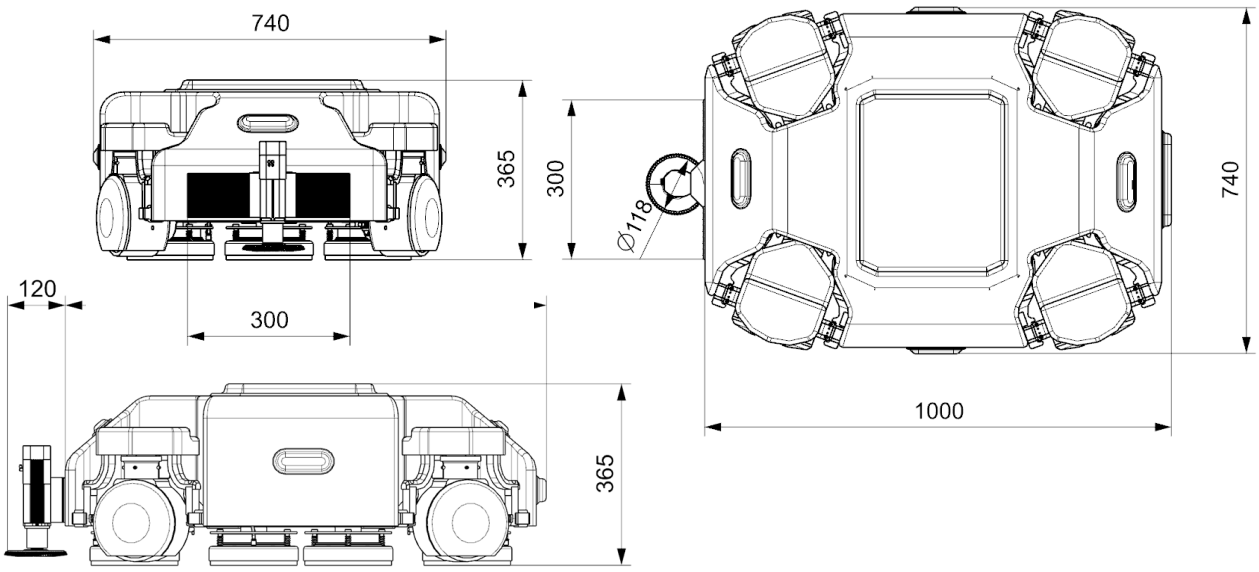

The previous model: **UMA-1**

A previous model of UMA has been designed during the period 2016 to 2019. The project has been selected among more than 50 other projects and awarded with the EU innovation radar prize 2019 in the two following categories.

Prize	Description	Year	Reports
	EU Innovation Radar - Overall Winner This prize is awarded by the EU commission to the high potential innovations and innovators in EU-funded research and innovation projects. (award to Anna Valente and ARM Lab).	2019	EURONEWS report https://www.euronews.com/2019/12/04/innovation-radar-prize-2019-4d-hybrid-project
	EU Innovation Radar - Women led innovation This prize aims to recognise the dynamic women who develop and lead great innovations supported by EU-funding. (award to Anna Valente)	2019	EURONEWS report https://www.euronews.com/2019/12/04/innovation-radar-prize-2019-4d-hybrid-project

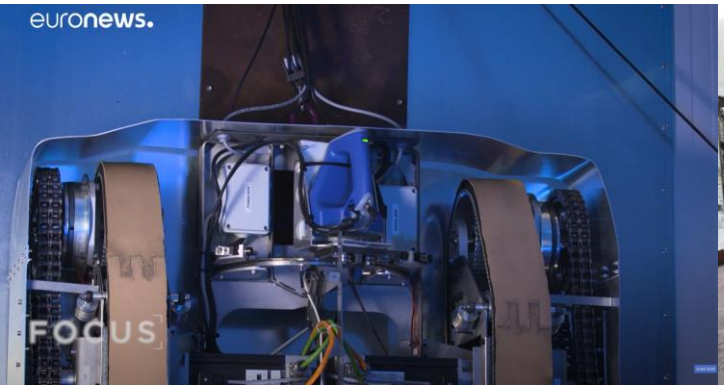

Scientific publication detailing UMA-1

Diego Gitardi, Mattia Giardini & Anna Valente (2021), "Autonomous robotic platform for inspection and repairing operations in harsh environments", International Journal of Computer Integrated Manufacturing, DOI: 10.1080/0951192X.2021.1925970

https://www.tandfonline.com/doi/full/10.1080/0951192X.2021.1925970

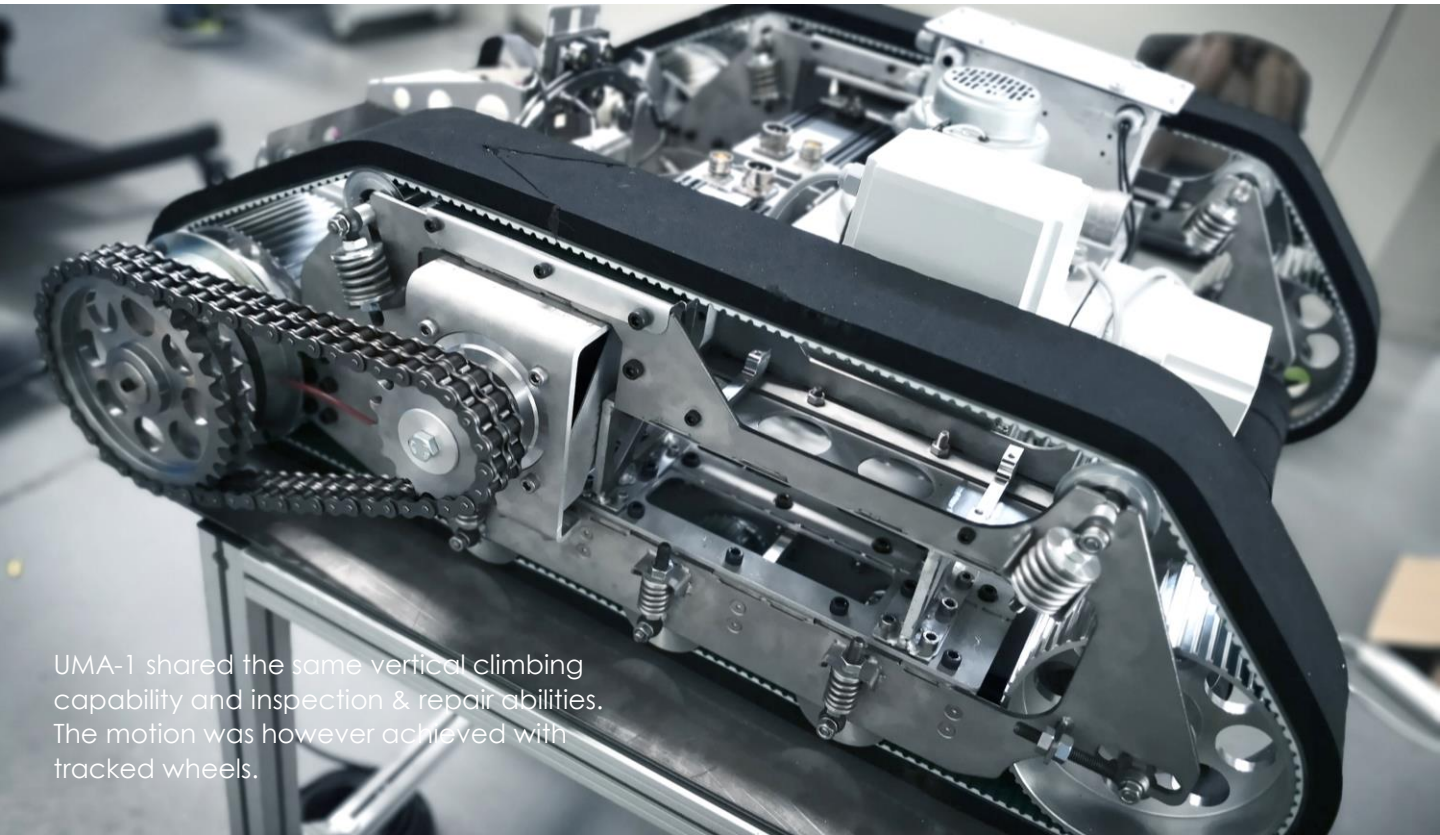

UMA-1 shared the same vertical climbing capability and inspection & repair abilities. The motion was however achieved with tracked wheels.

UMA-2 – Patented Adhesion System

A request for grant of an European patent has been submitted under application number EP21174904.9 for the above described vacuum cup, main component of the multi-adhesion system and it is currently patent pending.

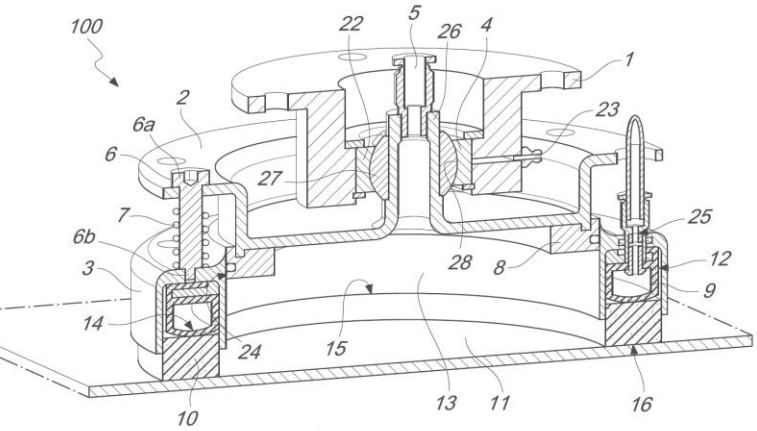

Fig. 1

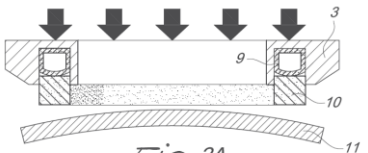

Fig. 2A

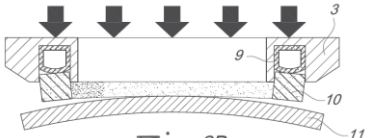

Fig. 2B

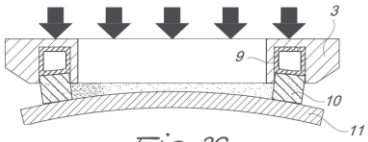

Fig. 2C

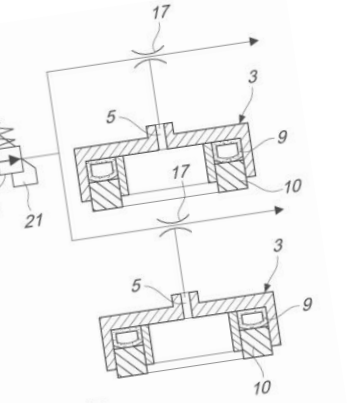

Fig. 4B

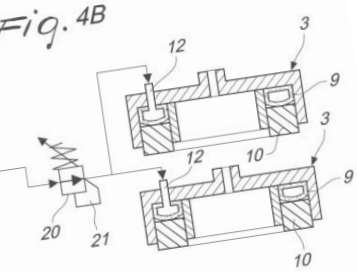

Fig. 5

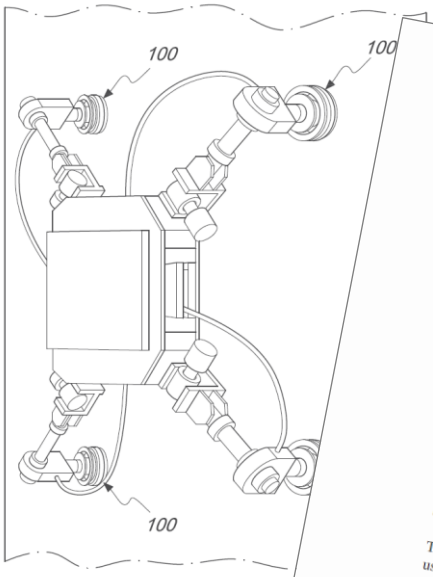

Fig. 3A

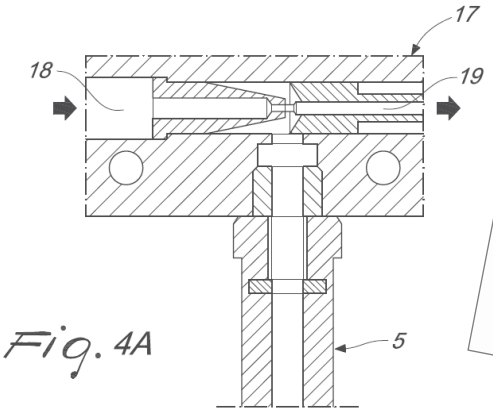

Fig. 4A

the pressure chamb
and/or external forc
surface determined
pressure chamber, s
of the pressure cha
uneven areas of a gr

According to the inv
gripper provided wit
pressure inside the i
vacuum pressure in
provide a suction fo
areas of the gripping
chamber in order to
side, in every part the
cup contacts. The step

BRIEF DESCRIPTIO

The vacuum cup that i
a mobile robot, a robo
with the vacuum cup
only, in the accompany

Fig. 1 is a cross-sectio

Figs. 2A-2C are schem
illustrating, in three sub
gripping surface;

Figs. 3A-3C are schema
cup according to the in
gripping surfaces that ha

Fig. 4A is a schematic, p
invention;

Fig. 4B is a schematic,
chamber and the sealing
according to the inventio

VACCUM CUP FOR A ROBOTIC SYS
VACUUM CUP, AND METHOD F
VACUUM CUP

The present inven
The invention fu
robotic arm, con
vacuum cup on un

In the last 10 year
robotic systems as
sectors, such as mai

These fields include,

In such context, many
various different indust

One of the current cri
platforms that are able to
that are characterized by
different materials compri

The resolution of this tech
use of robotic platforms in

The means that enable robots
gripping surfaces are generall

Such vacuum cups, which sh
keep the robot or robotic plat
objects that are gripped by the
arms of robots and robotic platfo

The vacuum cups are fed with
platform on which they are provid

The use of the presently known
climbing/moving robots to operate

Indeed, in the present market, it is p
sizes which are made of materials w
are designed to allow a grip on and
surfaces with low roughness.

The operating conditions of the curr
expressly not recommended) when it is
rugged or uneven surfaces. In such applic
guarantee the correct surface contact bet

Europäisches Patentamt
European Patent Office
Office européen des brevets

Acknowledgement of receipt

We hereby acknowledge receipt of your request for grant of a

Submission number	9813500
Application number	EP21174904.9
File No. to be used for priority declarations	EP21174904
Date of receipt	20 May 2021
Your reference	L022259
Applicant	Scuola universitaria prof della Svizzera italiana (S
Country	CH
Title	VACCUM CUP FOR A R SYSTEM, ROBOTIC SY COMPRISING THE VAC AND METHOD FOR PR TIGHT HOLD OF THE V ON UNEVEN SURFACE

UMA-2 completion rate

UMA-2 builds on the experience gathered with the UMA-1 mobile platform. All its main single modules have been designed, manufactured, assembled and successfully tested. These units have then been assembled together to assess the performance of the adhesion system. Preliminary results are very promising and design improvements over UMA rev I have already shown their effectiveness. UMA-2 will be completed by the end of 2021.

The wheel assembly

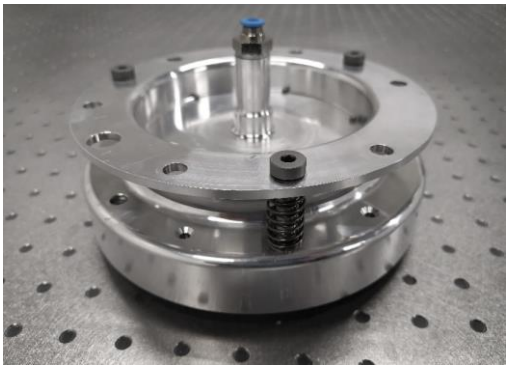

The patent pending vacuum cup

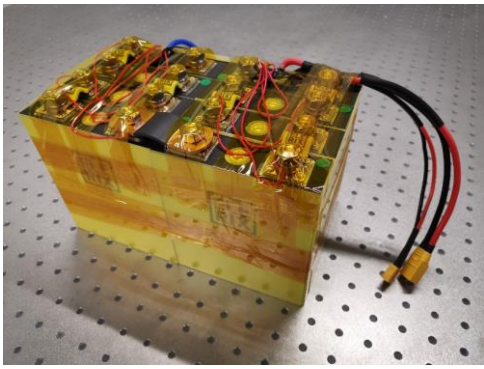

The assembled battery pack.
8x 3.2V 100Ah LiFePO4 cells, 24V with battery management system

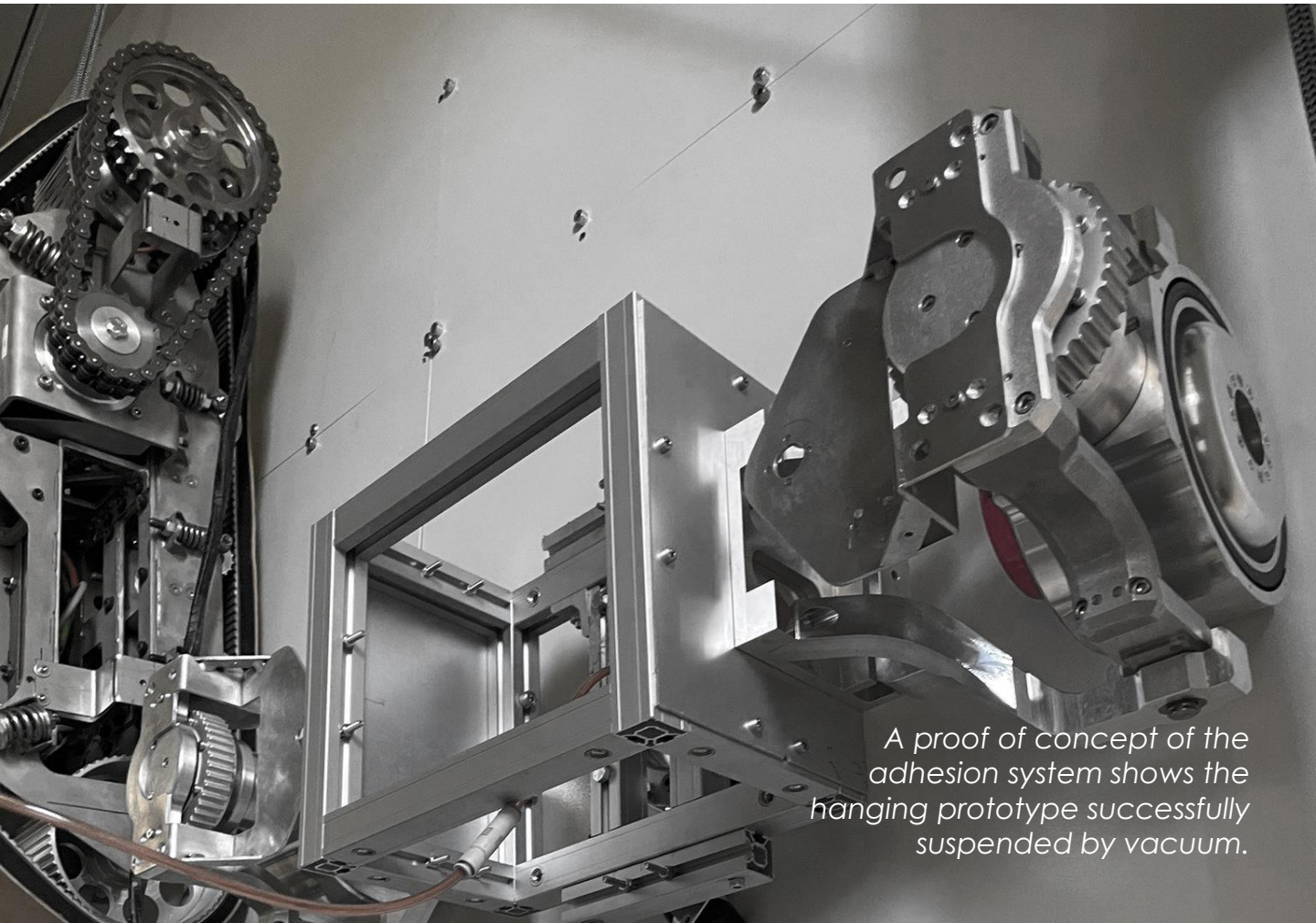

A proof of concept of the adhesion system shows the hanging prototype successfully suspended by vacuum.

People deserve to look at the world while feeling safe.

Prof. Anna Valente
Head of ARM-Lab
SUPSI-DTI-ISTePS

anna.valente@supsi.ch